PSGS4M-4414-10M
Industrial Ethernet Cable – Connection Cable

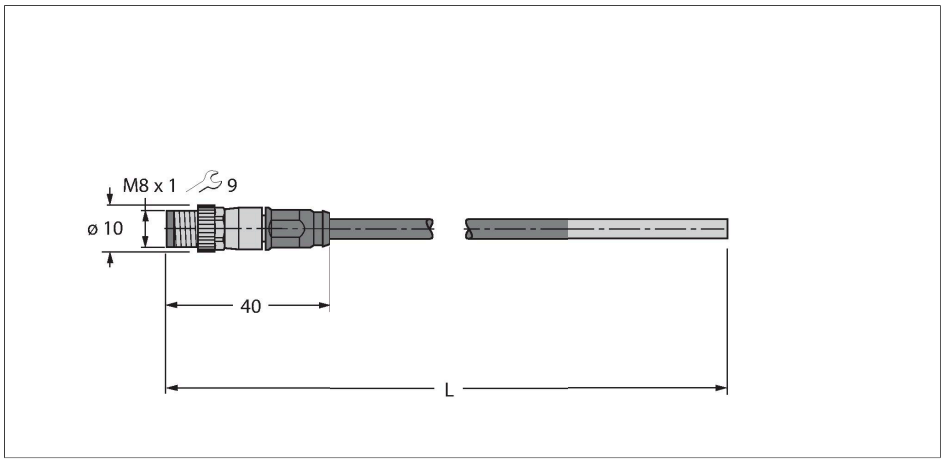

Technical data

Type	PSGS4M-4414-10M
ID	6933305
Connector A	Male, M8 × 1, Straight
Number of pins	4
Contacts	Metal, CuZn, Gold-plated
Contact carriers	PA, UL 94, Black
Connector body	Plastic, TPU, UL 94, Black
Coupling nut/screw	Zinc, GD-Zn, Nickel-plated
Tightening torque (range)	0.4 … 0.6 Nm (observe max. torque of mating connec-tor!)
Mechanical lifespan	> 100 Mating cycles
Pollution degree	3/2
Protection class	IP67, Only in screwed condition
Cable	
Network protocol	Ethernet, 4414
Cable diameter	Ø 4.8 mm ±0.30
Cable length	10 m
Cable jacket	PUR, Green
Shielding	Aluminum foil, tinned copper wire
Core insulation	PP
Core cross-section	4 x 0.15 mm²
Arrangement of strands	19 x 0.102 mm
Core colors	WHOG, WHBU, BU, OG
Electrical properties at +20 °C	
Rated voltage	42 V
Test voltage	700 V
Current	3 A

Features

- Ethernet cable: 4-pin, AWG 26
- CAT 5E acc. to ISO/IEC 11801, EN 50173, EIA/TIA 568-A
- Jacket material: PUR
- Jacket color: green
- Shielding: aluminum-laminated polyester film, copper braid
- Jacket diameter: 4.8 mm
- Suitable for drag chain use
- UV resistant
- Oil resistant acc. to IEC 60811-2-1 and DIN VDE 0282 part 10
- Free from silicone, PVC and LABS
- Free from halogen acc. to IEC 60754-2
- Flame retardant acc. to IEC 60332-1-2
- Approval: cULus
- RoHS compliant
- Protection class IP67
- End open
- M8 male connector, straight
- Cable length: 10 m

Cable Cross-Section

PSGS4M-4414-10M| 23-02-2025 10-49 | Technical modifications reserved

Technical data

Nom. impedance	100 Ω (1MHZ)
Nom. capacitance	51 pF/m
Mechanical and chemical properties	
Bending radius (stationary installation)	≥ 15 x Ø
Bending cycles	≥ 5 million
Torsional stress	± 30 °/m
Torsion cycles	Max. 100,000
Ambient temperature (fixed)	-40…+80 °C
Ambient temperature (mobile)	-25…+80 °C
Other Featues	
Qualified for drag chain use	yes
Halogen-free	yes
Silicone-free	yes
PVC-free	yes
Resistant to weld splatter	yes
Resistant to chemicals	yes
UV resistance	yes
Oil-resistant	yes
Flame-retardant	yes
Approvals	cULus

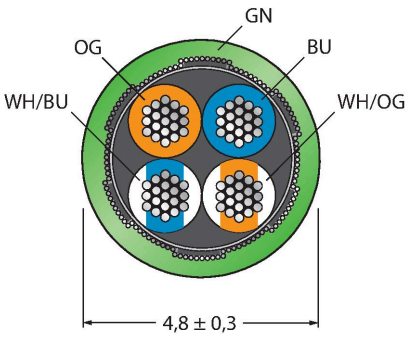

Contact assignment

Circuit Diagram

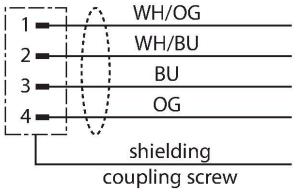

Accessories

Dimension drawing	Type	ID	
	FW-M8ST4-G-SB-ME-SH-6.5	6935010	
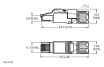	FW-RRSSP0822-IE-I-0510	100034569	Field-wireable male connector, RJ45, straight, 8-pin, IDC connection, cable feedthrough 5.5 mm to 10.0 mm, core cross-section/terminal capacity 0.14 mm² to 0.34 mm², metal housing; CAT6A (10 Gigabit Ethernet acc. to IEEE 802.3an)
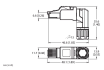	FW-RWSSP0822-IE-I-0510	100034570	Field-wireable male connector, RJ45, angled, 8-pin, IDC connection, cable feedthrough 5.5 mm to 10.0 mm, core cross-section/terminal capacity 0.14 mm² to 0.34 mm², metal housing; CAT6A (10 Gigabit Ethernet acc. to IEEE 802.3an)

PSGS4M-4414-10M| 23-02-2025 10-49 | Technical modifications reserved